IN ACCORDANCE WITH NCC VOLUME 2 (SECTION P3.10.1), THIS PRODUCT SATISFIES PERFORMANCE REQUIREMENT P2.1.1 FOR CONSTRUCTION IN A HIGH WIND AREA.

0.75mm G550 Roof Batten Spacings

Vsit (m/s)	qu (kpa)	Cpe	Cpi	Kc,e = Kc'l	KL Local Factor	Cfig	Design pressure Pe=qu.(Cpe.K'L.Kc,e+Cpi.Kc,i) (kPa)	Truss Spacing (mm)	Batten Spacing Fixed to Timber or 1.55 mm Steel G450 (mm)	Batten Spacing Fixed to 1.2 mm Steel G500 (mm)	Batten Spacing Fixed to 1.0 mm Steel G550 (mm)
76	3.47	0.90	0.70	0.90	1	1.44	4.99	600	1040	870	660
								900	650	580	440
								1200	380	380	330
					1.5	1.85	6.39	600	810	680	520
								900	500	450	340
								1200	280	280	260
					2	2.25	7.80	600	660	550	420
								900	410	370	280
								1200	230	230	210
					3	3.06	10.60	600	490	410	310
								900	300	270	200
								1200	170	170	150
70	2.94	0.90	0.70	0.90	1	1.44	4.23	600	1170	1020	780
								900	760	680	520
								1200	430	430	390
					1.5	1.85	5.42	600	960	800	610
								900	600	530	400
								1200	330	330	300
					2	2.25	6.62	600	780	650	500
								900	490	430	330
								1200	270	270	250
					3	3.06	9.00	600	570	480	370
								900	360	320	240
								1200	200	200	180
63	2.38	0.90	0.70	0.90	1	1.44	3.43	600	1250	1250	970
								900	950	840	640
								1200	530	530	480
					1.5	1.85	4.39	600	1150	990	750
								900	740	660	500
								1200	410	410	370
					2	2.25	5.36	600	970	810	620
								900	600	540	410
								1200	340	340	310
					3	3.06	7.29	600	710	590	450
								900	440	390	300
								1200	250	250	220
60	2.16	0.90	0.70	0.90	1	1.44	3.11	600	1290	1280	1070
								900	1040	930	710
								1200	580	580	530
					1.5	1.85	3.99	600	1190	1090	830
								900	810	720	550
								1200	460	460	410
					2	2.25	4.86	600	1070	890	680
								900	670	590	450
								1200	370	370	340
					3	3.06	6.61	600	780	650	500
								900	490	430	330
								1200	270	270	250
58	2.02	0.90	0.70	0.90	1	1.44	2.91	600	1320	1350	1140
								900	1120	990	760
								1200	630	630	570
					1.5	1.85	3.72	600	1220	1170	890
								900	870	780	590
								1200	490	490	440
					2	2.25	4.54	600	1140	950	730
								900	710	630	480
								1200	400	400	360
					3	3.06	6.18	600	840	700	530
								900	520	470	350
								1200	290	290	260
45	1.22	0.90	0.70	0.90	1	1.44	1.75	600	1550	1550	1550
								900	1550	1550	1270
								1200	1040	1040	950
					1.5	1.85	2.24	600	1440	1440	1440
								900	1440	1290	990
								1200	810	810	740
					2	2.25	2.73	600	1350	1350	1210
								900	1190	1060	810
								1200	670	670	600
					3	3.06	3.72	600	1220	1170	890
								900	870	780	590
								1200	490	490	440

MATERIAL SPECIFICATION
G550 Z275 or G550 AZ150
Base Metal 0.75mm thick
1.0kg/m Mass

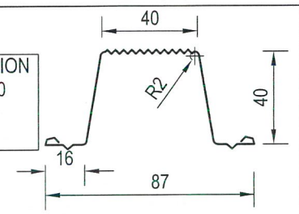

MINIMUM FIXING REQUIREMENTS

Rafter Type	# of screws	Fixing
Softwood	2 off	Buildex M6.5-12x55 mm Roof Zips
Hardwood	2 off	Buildex M6.5-12x40 mm Roof Zips
1.55 mm BMT G450 Steel	2 off	Buildex 14-10x25 mm HH Teks
1.2 mm BMT G500 Steel	2 off	Buildex 14-12x30 mm CyclonicZip
		Or Buildex 14-10x25 HH Teks
1.0 mm BMT G450 Steel	2 off	Buildex 14-12x30 mm CyclonicZip
		Or M6-11x25 mm Roof Zips

Timber shall be Structural grade MGP12 or stronger

Steel shall be a minimum thickness of 1 mm G550, 1.2 mm G500 or 1.5 mm G450.

All fixings shall have Class 4 protection finish.

Screws to comply to AS3566.1 - 2002: Self - drilling screws for the building and construction industries - General requirements and mechanical properties.

Recommended Ultimate Limit State Pull Out Capacity (kPa)		
Fixing to 1.55 mm BMT G450 Steel	Fixing to 1.2 mm BMT G500 Steel	Fixing to 1.0 mm BMT G550 Steel
3.91	3.27	2.50

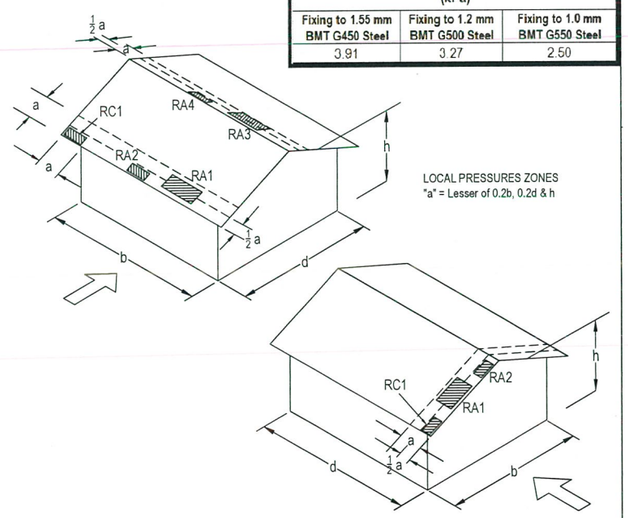

RA1 - KL = 1.5 - Upwind leading edges within "a" of the edge
RA2 - KL = 2.0 - Upwind leading edges within "a"/2 of the edge
RA3 - KL = 1.5 - Downwind side of hips and ridges within "a" of the edge - When roof pitch > or = 10°
RA4 - KL = 2.0 - Downwind side of hips and ridges within "a"/2 of the edge - When roof pitch > or = 10°
RC1 - KL = 3.0 for Roof pitch < 10° - Upwind corners within "a" of edge
RC1 - KL = 2.0 for 10° and greater - Upwind corners within "a" of edge

Product Name

Steeline 40mm Roof Batten

Product Description

40mm x 0.75mm G550 Roof Batten

Manufacturer's Name

GENERAL ROOFING PRODUCTS PTY LTD
24 Pruen Road, Berrimah, NT, 0828

Design Criteria

- Wind speeds, pressures shall be determined in accordance with AS/NZS1170.2-2011 Amendments 1- 4, Structural Design Actions - Wind Actions,
- Basic Regional Wind Velocity V_R = 69m/sec (R=500)
- Internal Pressure Coefficient Cpi = +0.7
- Cpe = 0.9 for h/d ratios <= 0.5
- Pe = qu x (Cpe x K_L x Kc,e + Cpi x Kc,i)
- Kc,e = Kc,i = 0.9
- "a" = Minimum of 0.2*d or 0.2*b or h

Limitations

- Pitch limitation is subject to drainage requirements and shall be checked separately.
- For roof pitch < 10° - note RC1 local zone in roof corners.
- Limited to h/d not greater than 0.5 in tabled spacings.
- Mt = Ms = Md = 1.0
- Span tables are suitable for minimum of 3 continuous spans
- Maximum overhang - 150mm
- For h/d>0.5 where Cpe > 0.9 refer to site specific engineer certification with adjusted Pe calculation.
- For Buildings not greater than 25m in height

- Minimum rafter steel thickness for fixing - 1.0 mm G550, 1.2 mm G500 & 1.55 mm G450
- When using cyclonic steel batten, the maximum batten spacing may be critical and limit the span of the cladding. It is essential that this sheet is read in conjunction with the relevant deemed to comply information for the roofing product adopted.
- Always walk over supports if possible, generally keep your weight distributed evenly over the soles of your shoes.
- Maintain a minimum of 3 screw threads protruding on the far side for steel support and minimum 35 mm Hardwood & 50 mm Softwood embedment depth into timber support using Buildex screws only.

Accepted for Inclusion

DTCM ref: M/706.

Chairman's Signature:

Chairman's Name: Paul Nowland

Date of Approval: 18-09-2020 Expiry Date: 18-09-2025

Notes covering basis of DTC (Relevant test reports etc)

The above specification is based on Blanmore LHL Testing Report No 150 to 158 inclusive (June 2013), Test Report No 250A/19, 250B/19 & 250C/19 dated August 2019 from Blanmore Testing Lab in Noosasville .

*Checking Engineers Certification

Name: John L Towler
Registration Number: 24642ES
Date: 06.05.2020
Signature:
*registered as a structural engineer in **Australia**

*Certifying Engineers Certification

Name: Wisnu Lim
NT Registration Number: 145651ES
Date: 06 April 2020
Signature:
*registered as a structural engineer in the **Northern Territory**