IN ACCORDANCE WITH NCC VOLUME 2 (SECTION P3.10.1), THIS PRODUCT SATISFIES PERFORMANCE REQUIREMENT P2.1.1 FOR CONSTRUCTION IN A HIGH WIND AREA

WARNING
Product Approval Withdrawn
October 2025

SPECIFICATION

This data sheet covers the use of 8.5mm thick EasyLap™ and EasyTex™ Panel Cladding in residential applications over a light-gauge steel frame or a timber wall frame and must be read in conjunction with current James Hardie literature for the product, namely "Installation Guide External Cladding: EasyLap™ & EasyTex™ Panel".

FRAMING & SHEET INSTALLATION

Install sheets vertically to steel or timber stud-frames as shown in **Figure 1** and in accordance with the stud and fastener spacing given in **Table 1** and **Table 2** depending on the wind load classification or design pressure.

Framing width at sheet joints must be a minimum of 42mm for timber and 38mm for steel. Where the studs at sheet joints are less than this, provide double 35mm wide studs at sheet joints. Ensure that double studs are fastened together and flush at the outside face.

All intermediate support studs must be a minimum of 64 x 35mm for metal framing and 70 x 35mm for timber.

All sheet edges and joints must be fully supported by framing.

Framing – Steel

The steel wall frame (minimum 64 x 35mm studs) must be in accordance with NCC 2019 Clause 3.4.2.0. Studs to be rolled steel sections not exceeding 2mm in thickness.

Framing – Timber:

Use of timber framing must be in accordance with AS 1684: 2010 "Residential timber-framed construction" and framing manufacturer's specifications. Use seasoned timber or else unseasoned hardwood minimum F14 grade. LVL timber may be used.

Spacing of the M12 cyclone rods to be determined from AS 1684.3: 2010, but never more than 2.4m apart if bracing capacity is claimed.

Jointing:

Sheet joints must coincide with the centre line of the framing member (see **Figure 2**).

FIXING / FASTENERS

Fixings and fastener may be minimum Class 3 finish if concealed and/or sealed, but must be Class 4 if exposed to the elements. Use the following fasteners or approved equivalent fasteners:

Fasteners - Steel Framing:

Use 30mm ITW Buildex FibreTeks® screws or 32mm or 40mm HardieDrive® screws or 32mm or 42mm Quickdrive (CBSDG series) screws.

Fasteners - Timber Framing:

Use a 2.8 x 40mm galvanised fibre cement nail. ND50 Brad nails may be used in wind classification C1 only and must be spaced at 125mm.

STRUCTURAL BRACING

Table 3 provides the ULS design bracing capacity of these panels when fixed in accordance with Table 1 and 2 stud and fastener spacing for wall heights of both 2400mm and 2700mm. Not applicable to cavity batten options.

Table 1: Maximum Stud & Fastener Spacing in AS 4055 Wind Classifications

AS 4055 Wind Classification	General Areas of Walls				Within 1200mm of Building Edges			
	Max Design Pressure (kPa)	Stud Spacing (mm)	**Sheet** Fastener Spacing (mm)	ND50 Brads (mm)	Max Design Pressure (kPa)	Stud Spacing (mm)	**Sheet** Fastener Spacing (mm)	ND50 Brads (mm)
C1	-0.98	600	200	125	-1.95	600	200	125
C2	-1.45	600	200		-2.90	450	150	
C3	-2.14	600	200		-4.27	300	150	
C4	-2.88	450	150		-5.77	300	125	

Table 2: Test Proven ULS Design Pressure Capacity

Stud / Batten Spacing (mm)	**Sheet** Fastener Spacing (mm)	Pressure or Suction Capacity (kPa)
600	125 (Brad nails)	2.00
	200	2.29
450	150	2.90
300	150	4.27
300	125	5.77

Table 3: ULS Design Bracing Capacity

Framing Details		Max Stud Spacing (mm)	Bracing Capacity (kN/m)
Timber framing with M12 cyclone rods	Single-sided	600	6.6
	Double-sided	600	7.3
Welded steel framing 1.2mm gauge	Single-sided	450	5.8
	Double-sided	450	6.0
Welded steel framing 1.6mm gauge	Single-sided	450	6.0
	Double-sided	450	7.8
	Single-sided	300	7.5
	Double-sided	300	11.0

Note: Double-sided means that there is an internal lining of James Hardie fibre-cement sheet of thickness at least 6mm with fasteners spaced at 200mm maximum throughout the sheets. Refer also the James Hardie NT DTC data sheet for structural bracing.

DETAILS & OTHER MATTERS

More extensive construction details and jointing details are provided in current James Hardie literature for EasyLap and EasyTex Panel cladding. Refer also to the Warranty for the system in that literature.

For further details on matters such as a thermal break, an appropriate weather barrier ("sarking"), flashing, system accessories and finishing, refer to current James Hardie technical literature for EasyLap and EasyTex Panel, the NCC or relevant Australian Standards.

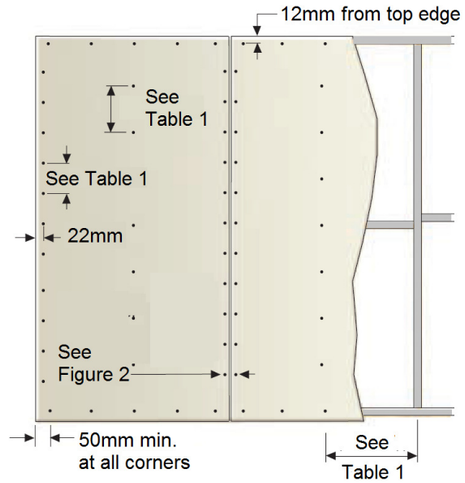

Figure 1: Sheet Fastening Spacing

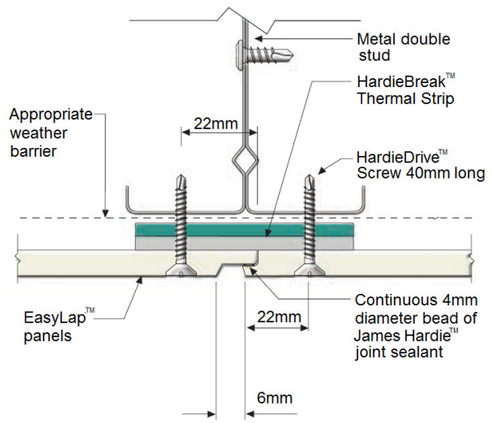

Figure 2: Sheet Joint on Steel Framing

Product Name:
EASYLAP™ & EASYTEX™ PANEL

Product Description:
8.5mm External Cladding for Walls

Manufacturer's Name:
James Hardie Australia Pty Ltd
10 Colquhoun Street, Rosehill NSW 2142

Design Criteria:

[1] General

All design and construction must comply with the appropriate requirements of the current National Construction Code (NCC) and other applicable regulations and standards.

[2] Wind Loading

The cladding sheet must be fastened to the frame in accordance with **Table 1** for the different wind classifications, which are taken from AS 4055: 2012 "Wind Loads for Housing". The effective design wind speeds are given in Table 2.1 of AS 4055: 2012.

For design to AS/NZS 1170: 2011 Part 2 "Wind Actions", the test-proven ULS design capacity of the system is given in **Table 2**, noting that an ULS material capacity reduction factor ('phi') is implicitly included and no further factoring of the design capacity is needed.

Limitations:

[1] EasyLap and EasyTex Panel are external wall claddings for residential use only. This cladding has been designed for external pressure and suction loadings only. The designer must ensure that the framing is capable of resisting simultaneously the internal and external design pressures (ie **an internal lining is required**).

[2] To use **Table 1**, the design must comply with geometric limits given at Clause 1.2 of AS 4055: 2012 (eg max eaves height = 6m and max building width = 16m), except as varied by the design engineer.

[3] All fasteners specified must be driven flush. Do not fix fasteners closer than 22mm from shiplap edges, 12mm from top edges, or closer than 50mm from sheet corners (refer to dimensions shown in **Figure 1**)

Accepted for Inclusion

DTCM ref: M/720

Chairman's Signature:

Chairman's Name: Paul Nowland

Date of Approval: 16/10/2020

Expiry Date: 16/10/2025

Notes covering basis of DTC (relevant test reports etc):

The nominated structural capacity of the system is based on the following documentation:

[1] James Hardie Advice Note "Compendium of the Design of EasyLap™ Panel Cladding" dated 4 September 2012.

[2] James Hardie Test Reports in relation to uniform pressure capacity TS003-09 dated 5 March 2009, TS036-10 dated 8 November 2010 and TS015-05 dated 7 April 2005.

[3] James Hardie Advice Note "Design Bracing Capacities for EasyLap Panel Cladding in the Australian Building Market" dated 29 September 2009.

[4] BRANZ Test Report ST0632/1 "Indicative Tests for James Hardie" dated 22 June 2006.

[5] James Hardie email to Cardno Engineers dated 30.09.2019 re addition of EasyTex variant.

*Design Engineers Certification

Name: PRAVEEL PRASAD
Cardno (NSW/ACT) Pty Ltd
Rego Number: IEAUST 923657
Date: 14 October 2020
Signature: Prasad.

*registered as a structural engineer in Australia

**Certifying Engineers Certification

Name: DAVID BENEKE
NT Rego Number: 58478 ES
Date: 15 October 2020
Signature:

**registered as a structural engineer in Northern Territory